BODY, SEAT MOUNTING, PASSENGER - Z26SPD92AN/AH/BN/BH (C750226)

2026 RZR - RZR PRO S ULTIMATE (R01) - Z26SPD92AN/AH/BN/BH

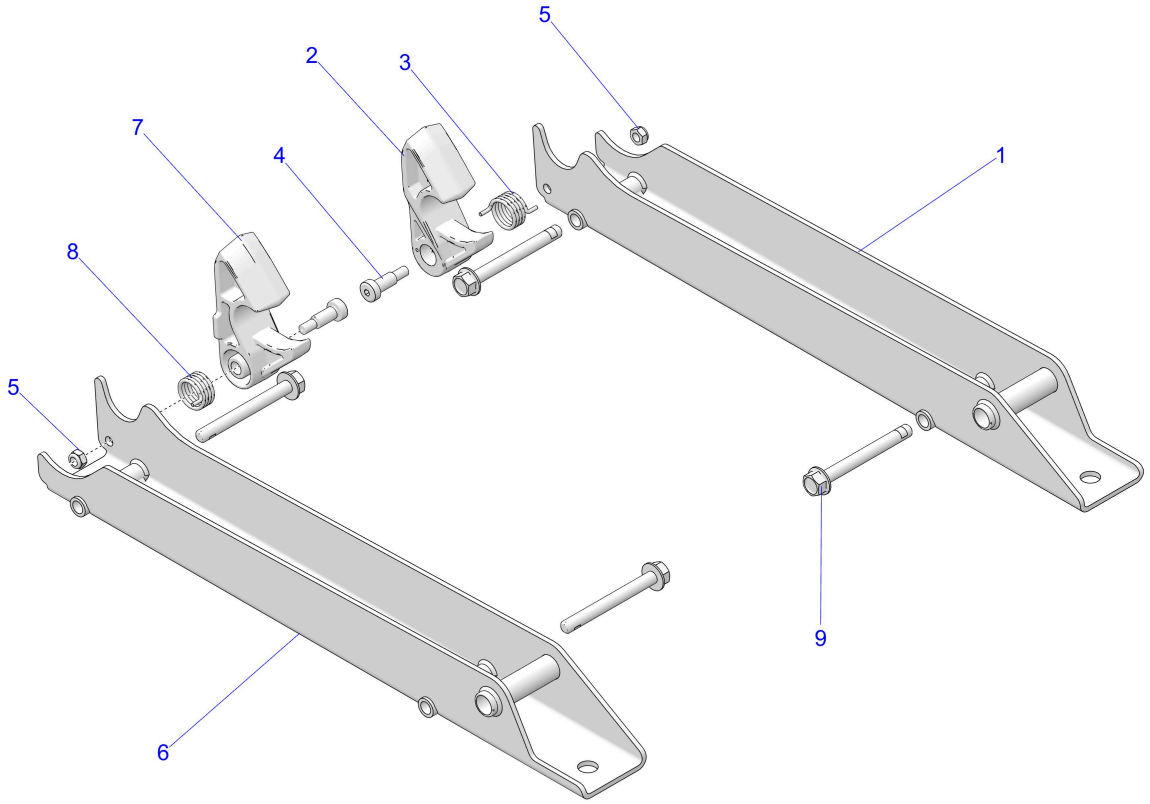

© 2023 Polaris Industries Inc.

C750226

Reference #	*Part#*	*Description*	*Quantity*
1	2639269	ASM-RCVR,MAN SEAT,ADJ,LH [INCL. 2-5]	1
2	5456315	LATCH-HOOK,LH	1
3	7043989	SPRING, LATCH, LH	1
4	7519980	SCR-SH-M6X1.0X11 12.9 ZB SHB	2
5	7546703	NUT-6MM X 1 NYLOK-Z	2
6	2639270	ASM-RCVR,MAN SEAT,ADJ,RH [INCL. 4-8]	1
7	5456316	LATCH-HOOK,RH	1
8	7043990	SPRING, LATCH, RH	1
9	7521089	SCR-HXFL-M8X1.25X75 8.8 ZOD NY	4

Copyright 1996-2026 Polaris Industries U.S.A All rights reserved.